TECHNOLOGY IN MOTION

www.maco.eu

ASSEMBLY INSTRUCTIONS

RUSTICO
Frame assembly

Use
exclusively for certified specialists!
Not for end users!

RUSTICO SHUTTER HARDWARE

Notes:
Unless otherwise indicated, measurements are made in millimetres and packing units in pieces per carton.
All diagrams are only symbolic.
Further technical documentation can be found in our online catalogue (TOM) at extranet.maco.eu

This print document is continuously revised and is available as a download in the current version at www.maco.eu.
Printing errors, mistakes and changes are reserved.

Please send suggestions and ideas for improvements to our instructions by email to: feedback@maco.eu.

ATTENTION!
Safety hazard in case of non-compliance!!!

Key


Reveal depth


Discharge


Hinge crank


Long hinge total length


Pin distance


Minimum pin depth


Pin length


Shutter pin holder height


Shutter pin holder width


Dowel total length


Diameter shutter pin socket


Locking hook height


Wall distance


Screw distance


Fixing bolt total length


Shutter distance through striker pin bracket


Shutter thickness


Crank opener total length


Length of operating arm


Offset


Distance between shutters


Frame clearance


Number of slat supports


Distance


Hinge size


Rebate depth


Cladding thickness


Insulation thickness


Packer thickness

Table of Contents

Calculation and assembly 6

Hinge and Clamp Assembly (together) 7

Shutter hinge assembly 8

Fixing clamp / shutter pin assembly 9 - 10

- Jig for separate rebate - Order No. 27958 9
- Setting options 10

Classic shutter catch assembly 11

Comfort shutter catch assembly 12

- for window shutters 12
- for door shutters 12

Shutter catch for doors assembly 13

Fixing bolt 14 - 15

Snap holder assembly 16 - 19

- Proper use 16
- Scope and Notes 16 - 17
- Assembly positions 17
- Assembly examples for Timber/PVC frames 18
- Settings 19

Crank opener assembly 20 - 24

- Proper use 20
- Application area and notes 20 - 21
- Mounting position 21
- Space requirements and drilling 22
- Calculation examples of the crank opener sizes 23 - 24

Jigs 25 - 27

- For joint rebate with swivel arm - No. 205649 25
- For joint rebate with hinge - No. 102888 26
- For separate rebate with swivel arm or hinge - No. 102889 27

Folding shutter rods 28

Shutter locks 29 - 30

- Centre lock single-sash 29
- Centre lock double-sash 29 - 30

Multi-point locking rod 30 - 32
Shutter lock 1-sash 30
Shutter lock 2-sash 30 - 31
Snap lock 31
Striker pin brackets 32

Folding shutters 33 - 34
with external pivot point 33
with internal pivot point 34

Shutter suspending run-up block 35

Calculation and assembly

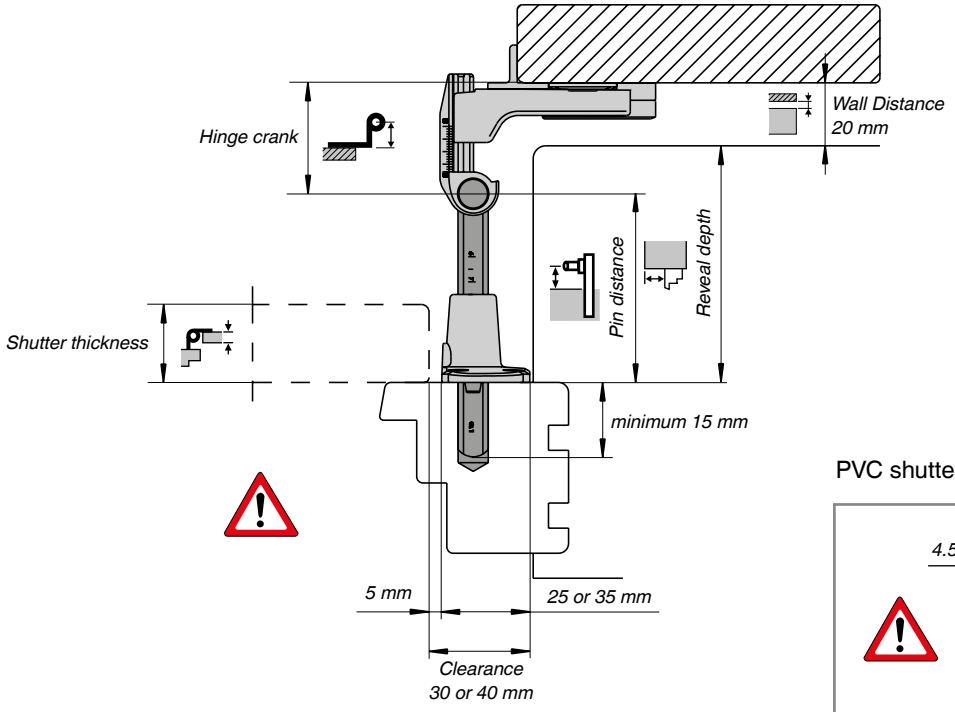

		110 mm
	+	20 mm
	+	30 mm
	=	160 mm : 2
	=	80 mm

		110 mm
	+	20 mm
	-	30 mm
	=	100 mm : 2
	=	50 mm

PVC shutters and frame installation

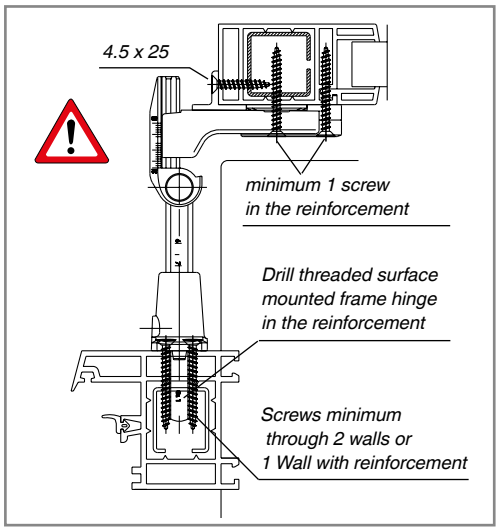

Fixing:

Timber shutters and frames installation

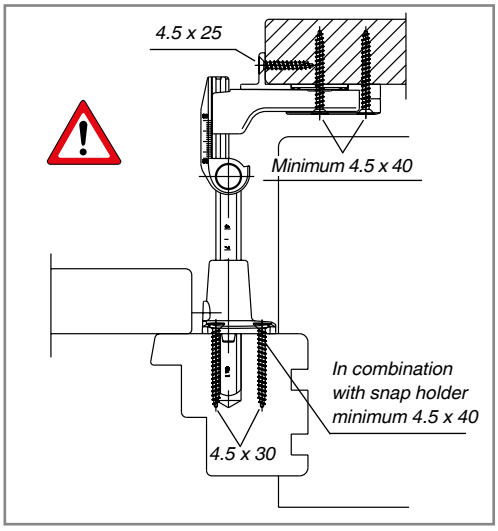

Aluminium shutters and frames

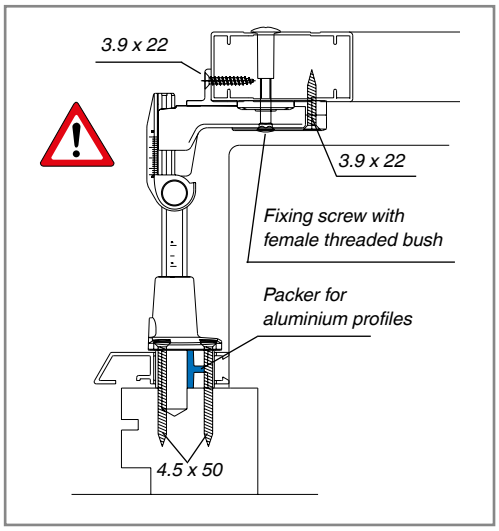

Hinge and Clamp Assembly (together)

Jig for joint rebate - Order No. 27960

Shutters and frame installation can be drilled in one operation.

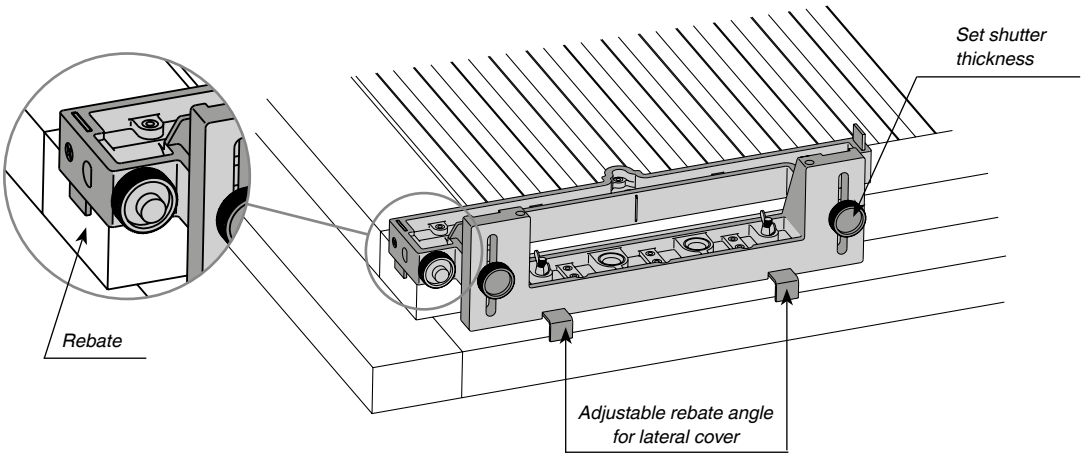

Shutter hinges

500 – 1600	2 Hinges
1600 – 2100	3 Hinges
2100 – 2600	4 Hinges

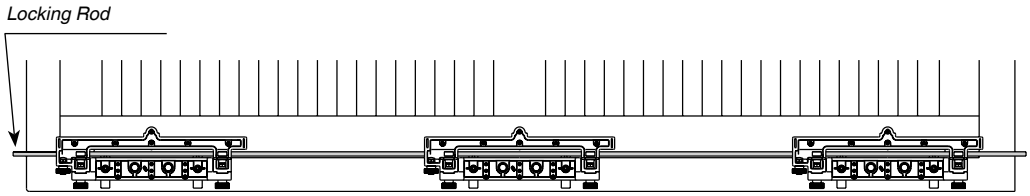

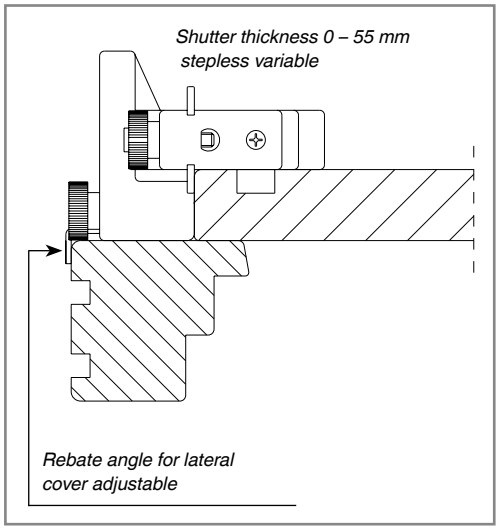

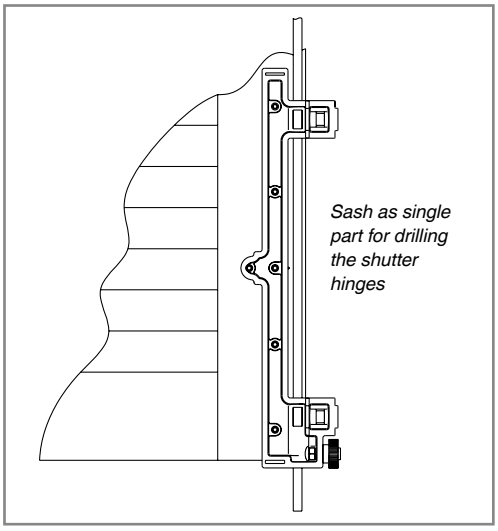

Shutter hinge assembly

Jig for separate rebate - Order No. 27958

Rebate on shutters

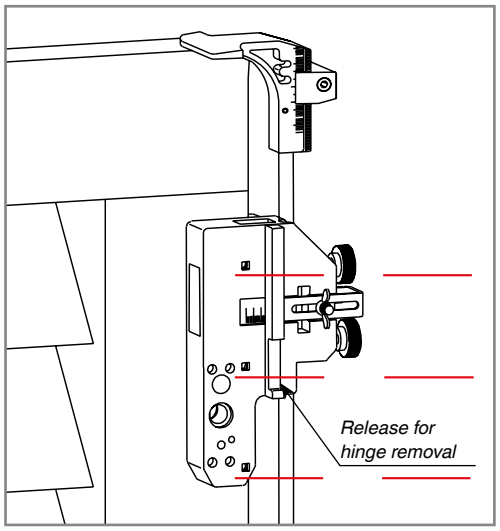

Hinge assembly on shutters

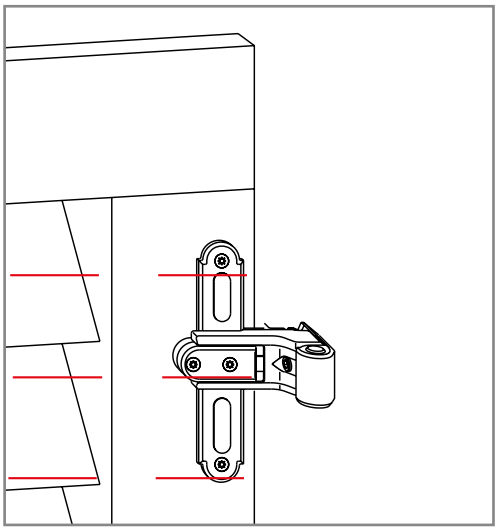

Position on the shutter

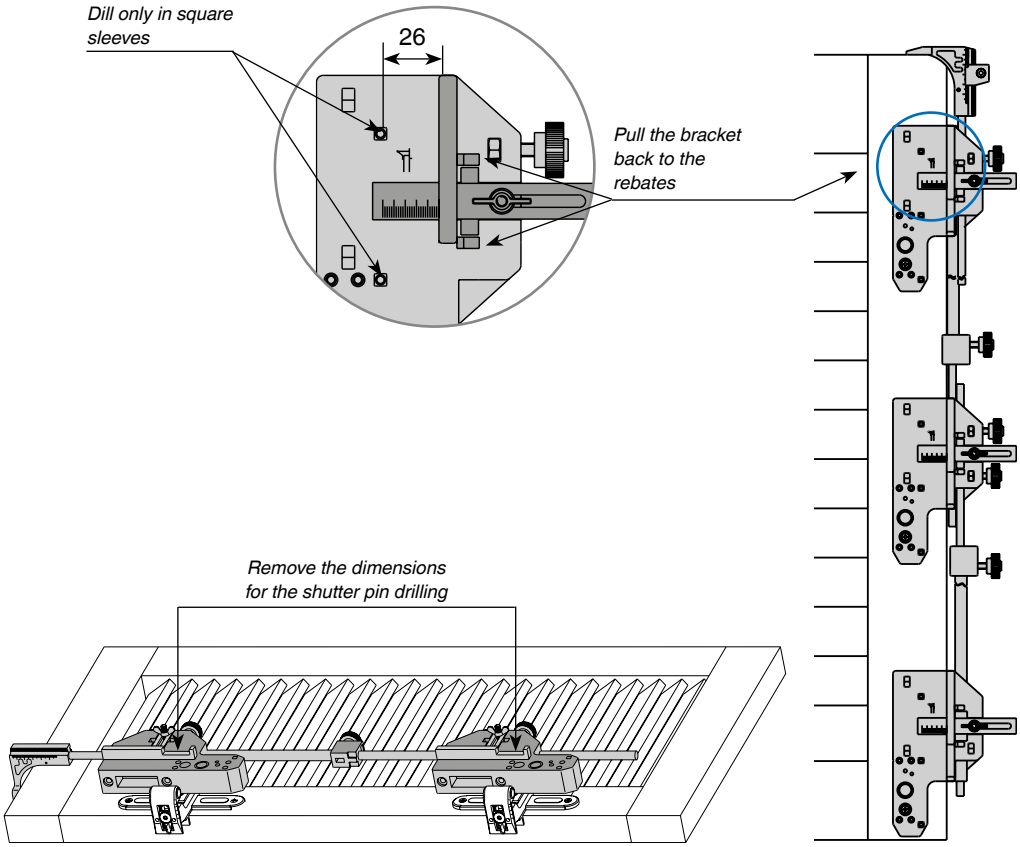

Fixing clamp / shutter pin assembly

Jig for separate rebate - Order No. 27958

Shutter pin holder assembly on frame installation

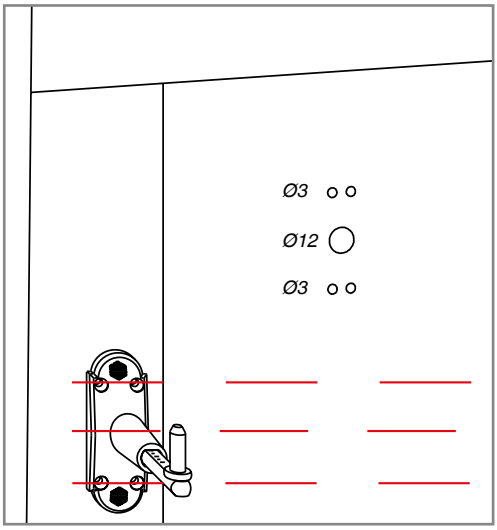

Jig bracket on frame installation

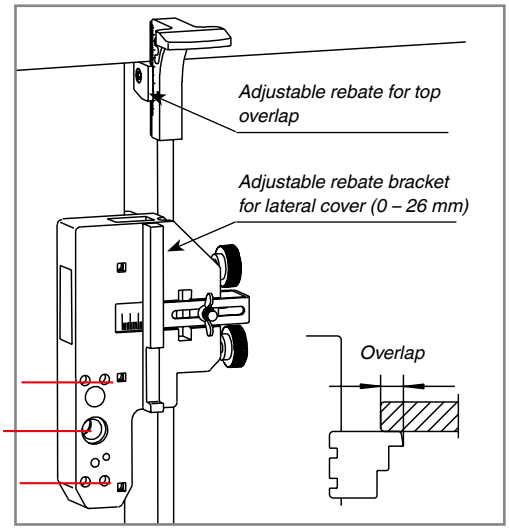

Position on frame installation

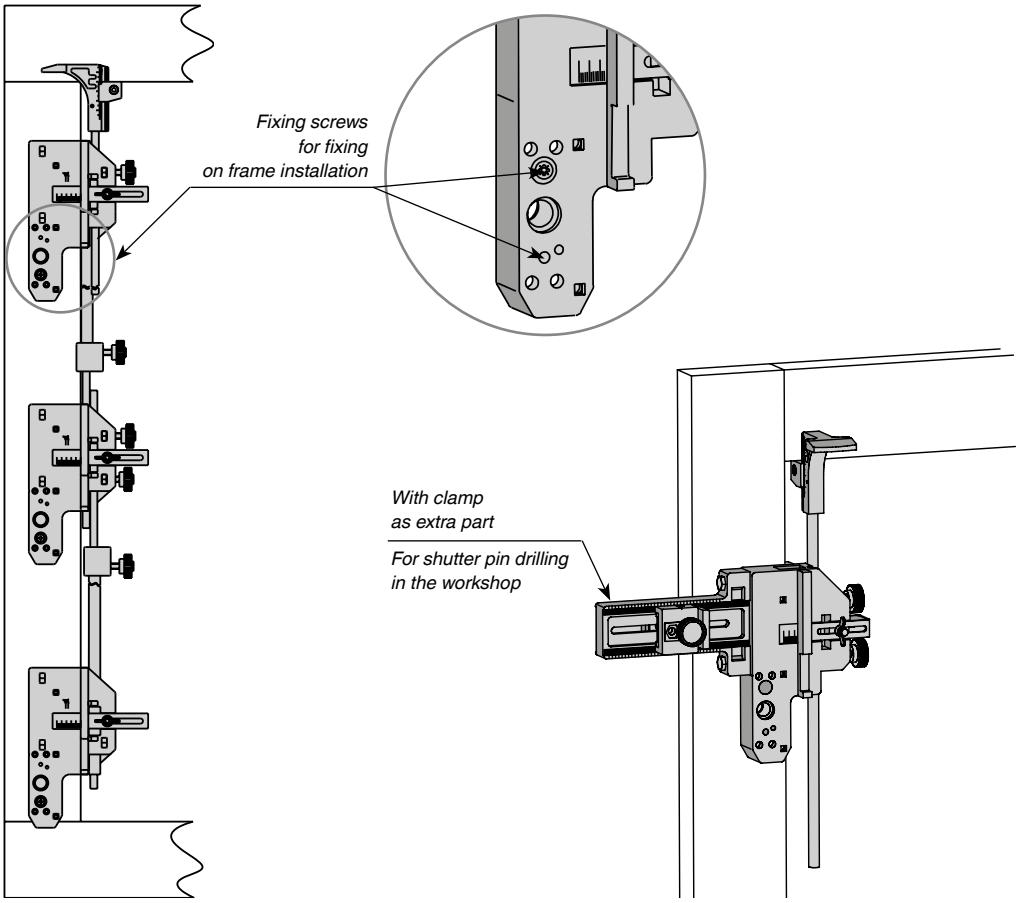

Setting options

Lateral adjustment

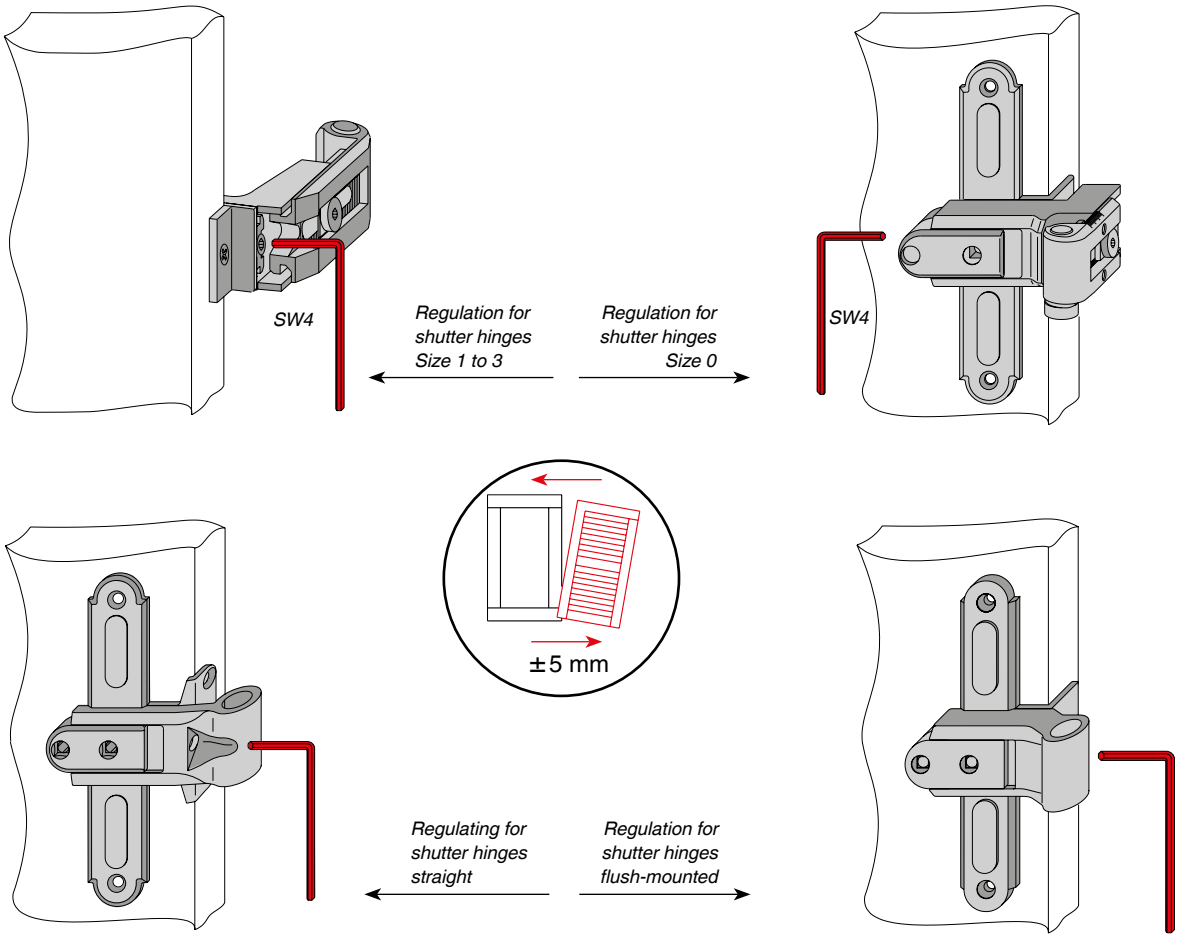

Pin distance

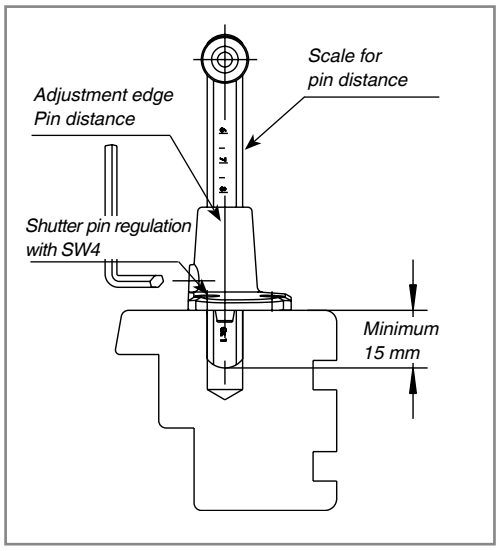

Hinge crank

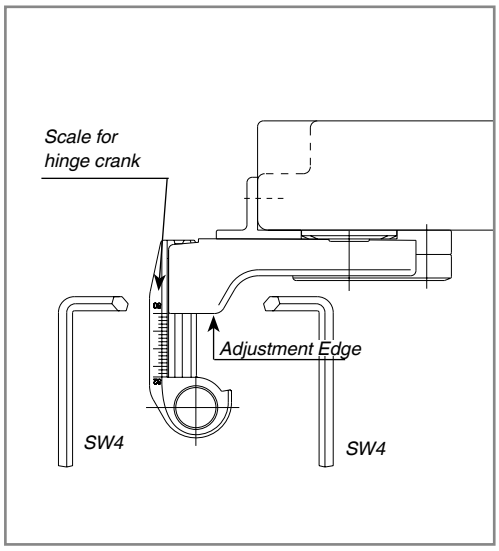

Classic shutter catch assembly

Fixing bolt

with L96	Ø 10 mm	For dowels
with L140 - L450	Ø 14 mm	

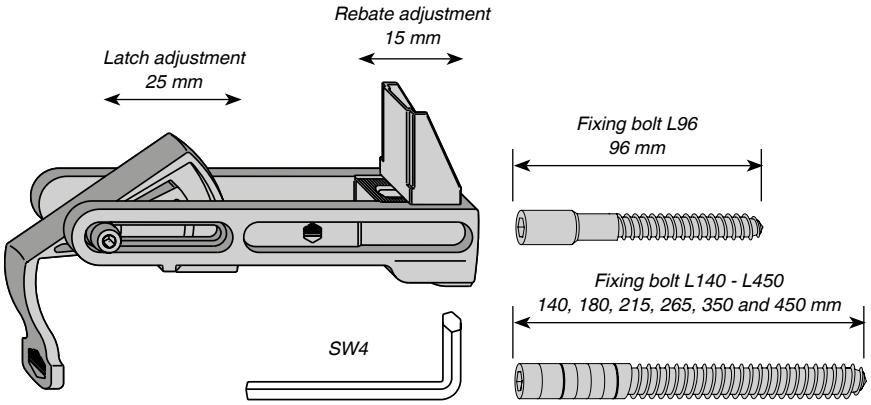

Function

Closing the shutter –
raise the latch until it clicks into place.

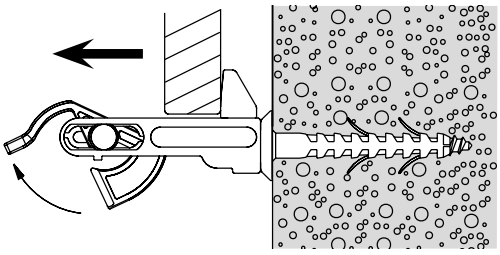

Opening the shutter –
latch automatically snaps into place.

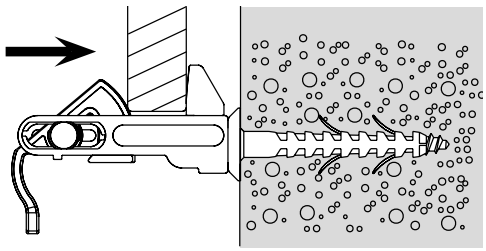

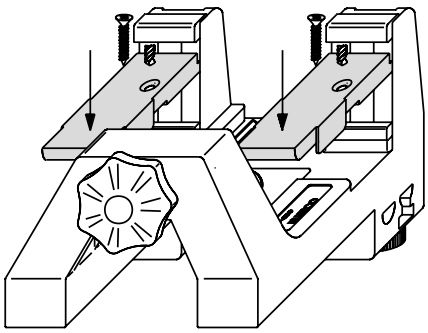

Drilling jig for shutter catch 13009 is equipped with regulator setting blocks 14483. Old jigs are to be subsequently added to.

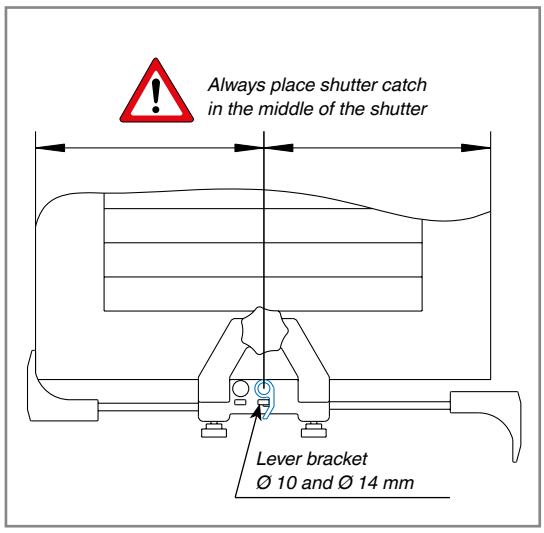

Comfort shutter catch assembly

for window shutters

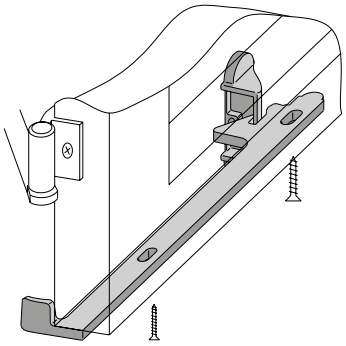

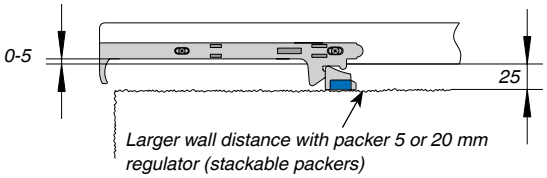

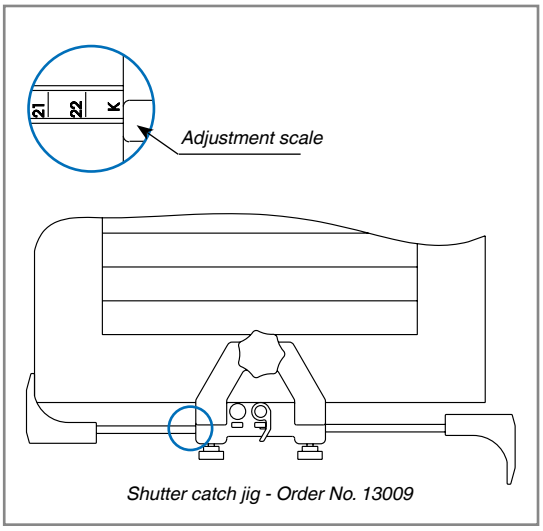

for door shutters

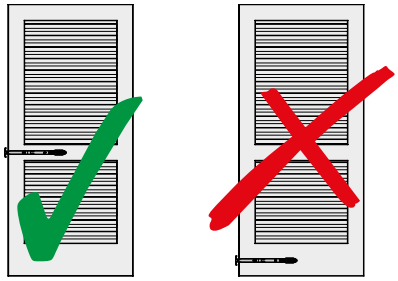

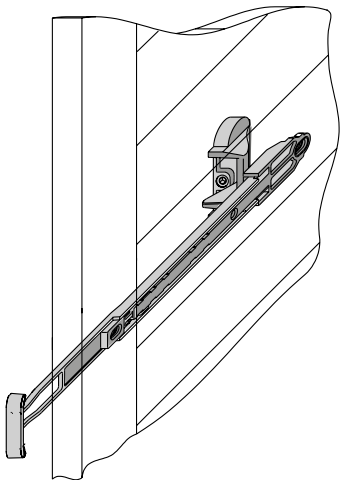

Rebate on the shutter:

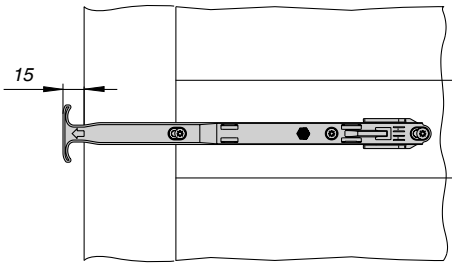

Rebate on the wall:

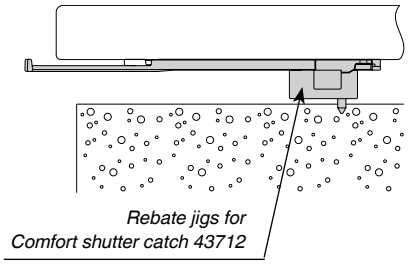

Shutter catch for doors assembly

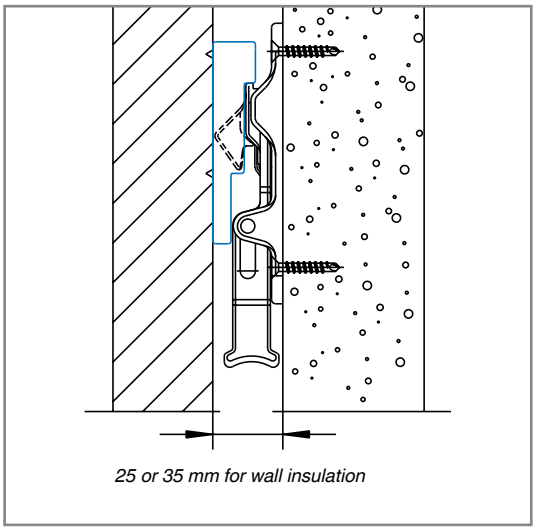

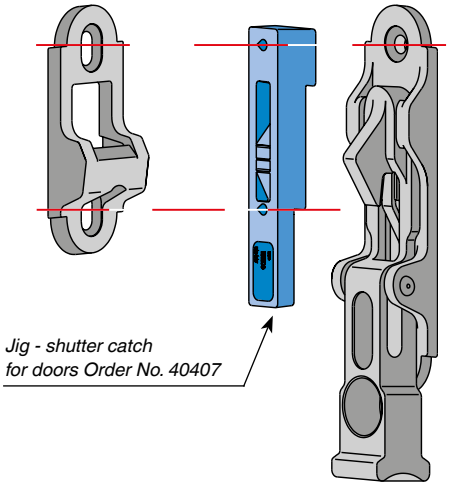

Larger wall distances with packer 15 mm regulator (stackable packers).

Fixing bolts for shutter catches

Without wall insulation

Fixing bolts L96 and L140

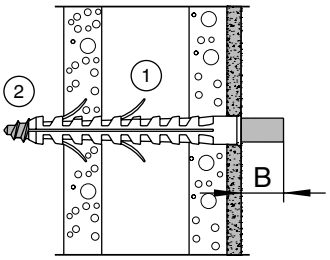

With wall insulation

Fixing bolts L180, L215 and L265

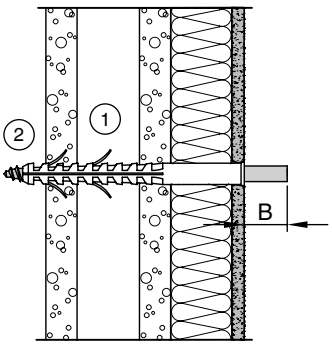

Fixing bolts L350 and L450

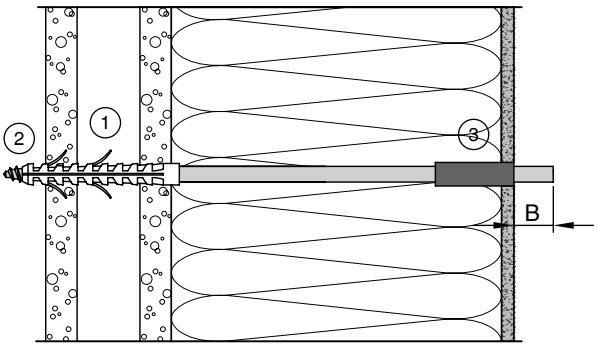

B = fixing bolt distance

(1) The dowel must reach through at least two brick walls. It must be ensured that the expansion of the dowel has a vertical effect. Otherwise, there is a danger that the brick will break.

(2) The fixing bolt must be screwed through the dowel.

(3) When using the fixing bolts L350 and L450, care must be taken to ensure that the enclosed support tube can support correctly in the area of the wall plaster and the wall insulation. For this purpose, the support tube is pushed flush onto the fixing bolt.

Fixing bolts	Insulation	Dowel	Dril Ø	Support tube
L96	0	50	10	–
L140	0	100	14	–
L180	20 - 45	135	14	–
L215	45 - 95	185	14	–
L265	95 - 140	230	14	–
L350	140 - 215	100 (without bundle)	14	Yes
L450	215 - 315	100 (without bundle)	14	Yes

Data in mm

The selection of the correct dowel is decisive for the necessary stability of the fixing bolts.

When using the fixing bolts L350 and L450, the use of the enclosed support tube is absolutely necessary.

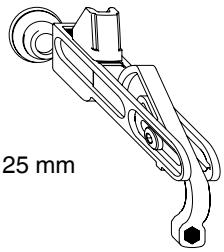

B = 25 mm

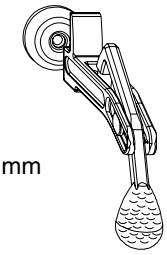

B = 25 mm

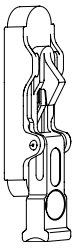

B = 12 mm

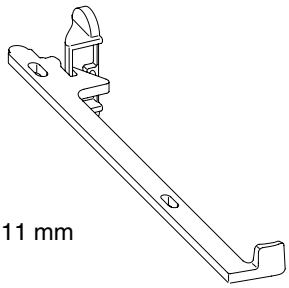

B = 11 mm

Snap holder assembly

DANGER!
For the use of the crank opener, please refer to Chapter 1.3 „Wind Resistance“ in the catalogue!

Proper use

Snap holders allow the self-locking of shutters in the open state. They may only be installed and used for this purpose!
Installation and adjustment of the snap holders may only be carried out by qualified personnel!

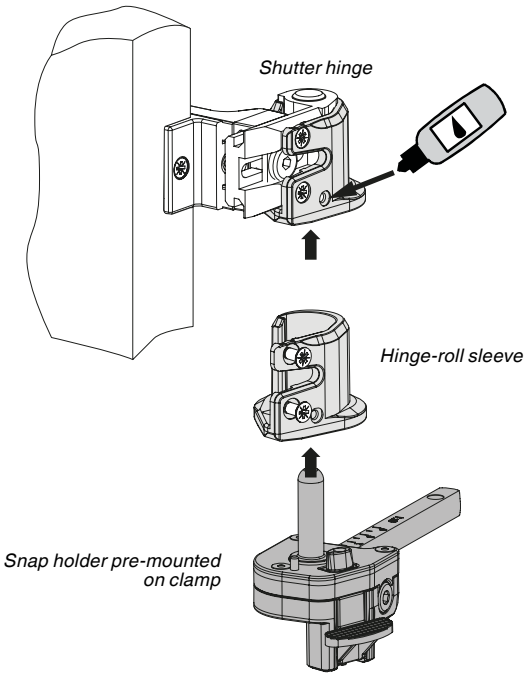

Application area and application notes

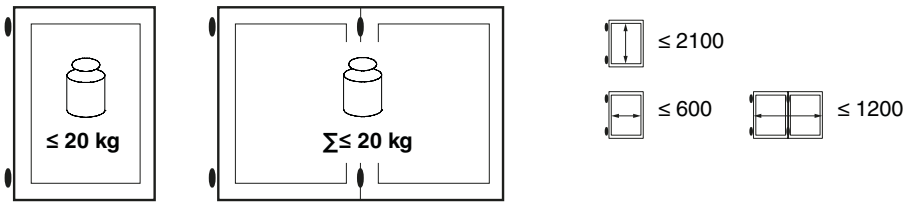

DANGER!

L90, L110 and L140:

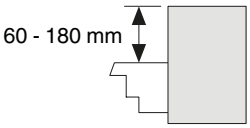

L165:

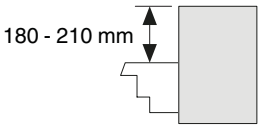

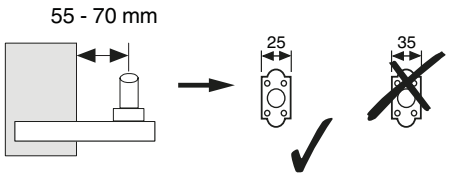

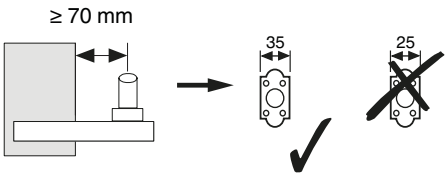

Application area and application notes

DANGER!
Folding shutters with internal pivot point must not be combined with a snap holder (risk of damage in case of a storm)!

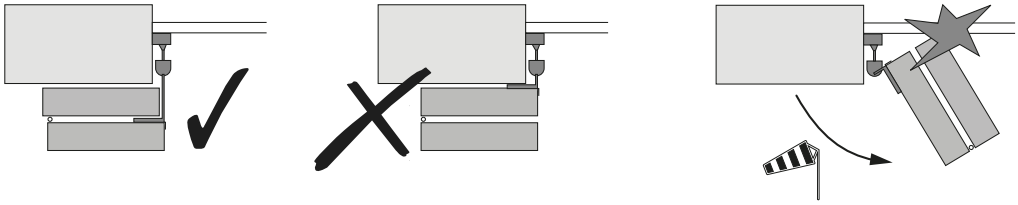

DANGER!
Snap holders have a limited storm resistance. Do not use in storm-prone areas!

Shutters with snap holders have a limited storm resistance. All notes under Wind Resistance in the catalogue must be observed!

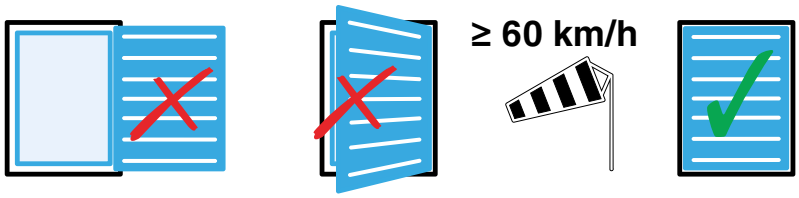

Assembly positions

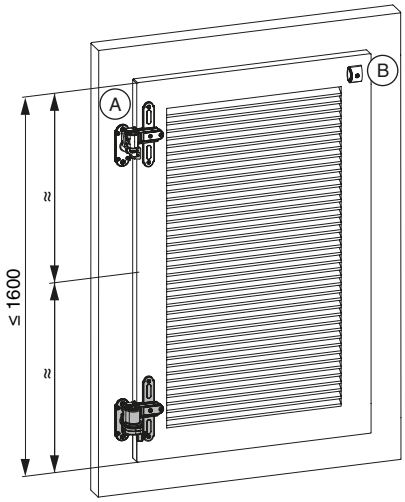

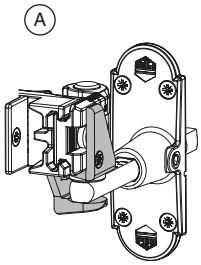

DANGER!
Per shutter, an anti-jemmy device (A) (Art. Nr. 13327 or 13328) and a rebate buffer (B) (Art. Nr. 42929 or 201313) must be installed!

DANGER!
Snap holder L165 must not be used as a supporting pin!

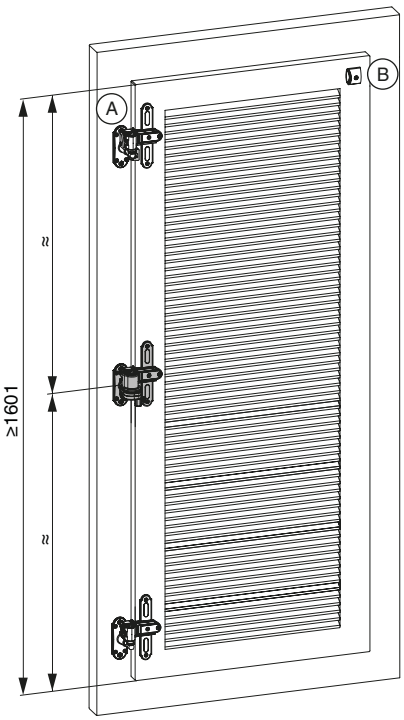

Timber Frame assembly example

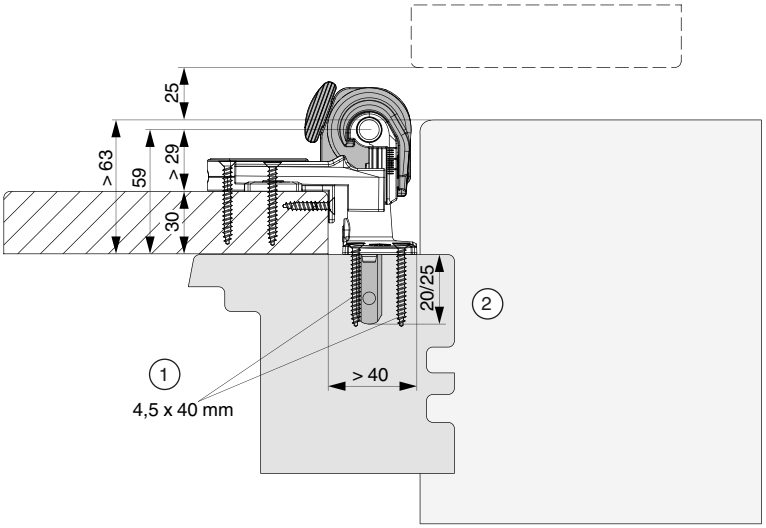

1. Use screws with minimum 4.5 x 40 mm.
2. Drill the threaded surface mounted frame hinge into the timber frame.

L90, L110, L140 = ≥ 20 mm
L165 = ≥ 25 mm

PVC Frame assembly example

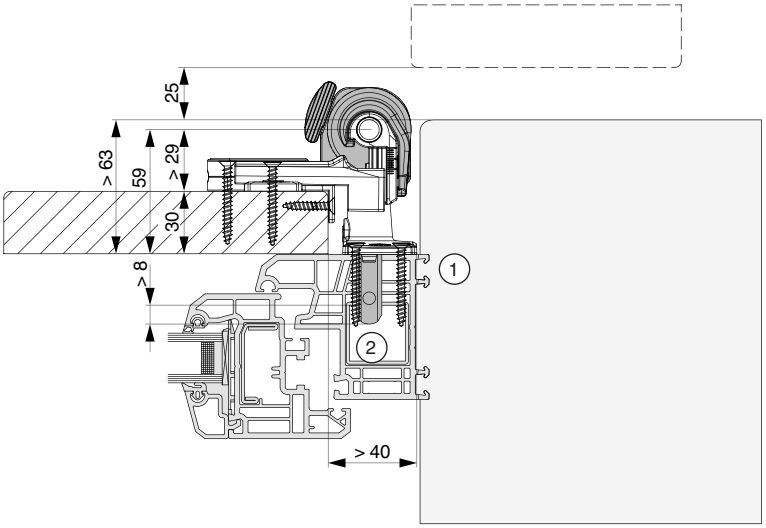

1. Screws must reach through the reinforcement.
2. Threaded surface mounted frame hinge must be at least 8 mm inside the reinforcement.

Settings

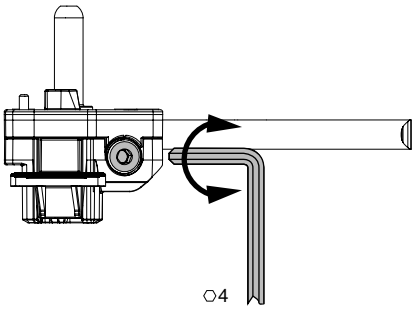

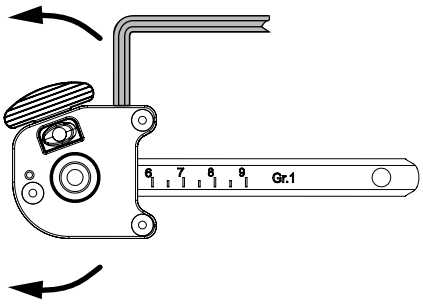

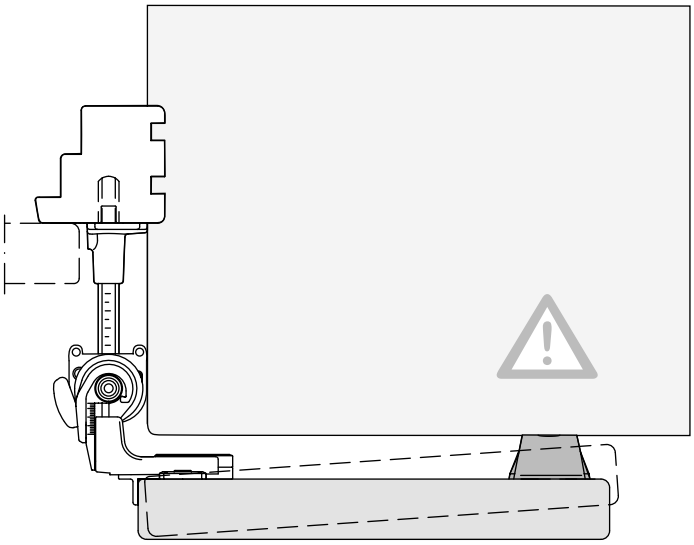

ATTENTION:
Always adjust the shutters so that the buffer is attached to the wall!
When using the rebate buffer, pay attention to sufficient pressure resistance of the façade (e.g. with thermal insulation).

Crank opener assembly

DANGER!
For the use of the crank opener, please refer to Chapter 1.3 „Wind Resistance“ in the catalogue!

Proper use

Crank openers enable opening and closing of shutters with closed window sashes from the inside of the room. They also fix the shutters in open and closed positions. They may only be installed and used for this purpose!

Installation and adjustment of the snap holders may only be carried out by qualified personnel!

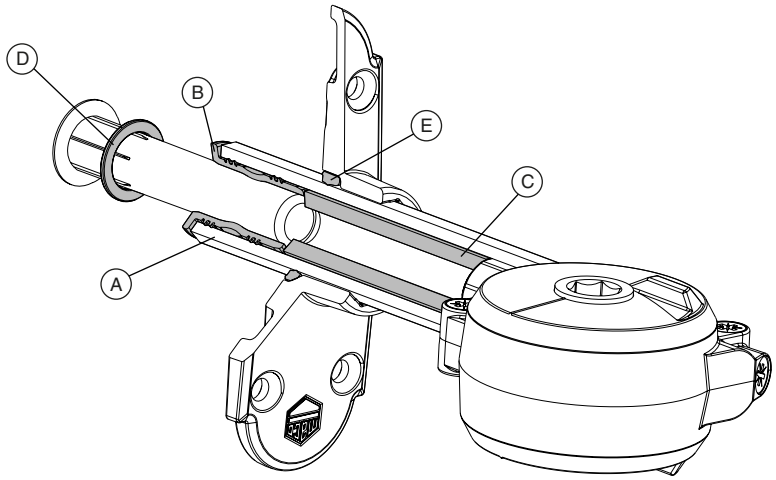

1. Shorten the octagon tube (A) as needed.
2. **Mount the gasket socket (B), insulation sleeve (C) (shorten as required), sealing washer (D) and gasket for bracket (E) (pay attention to accurate positioning) – otherwise there is a danger of condensation formation and rust! Grease all parts prior to assembly!**

Application area and application notes

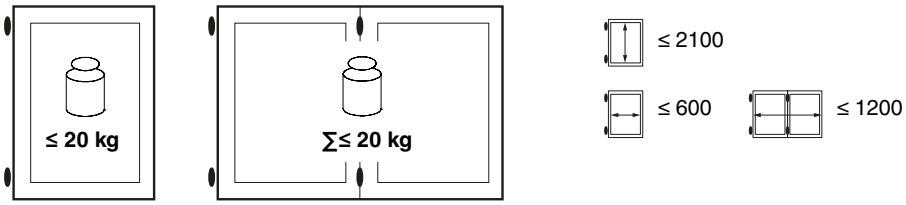

DANGER!
Folding shutters can only be equipped with internal pivot point and folding shutter rods.

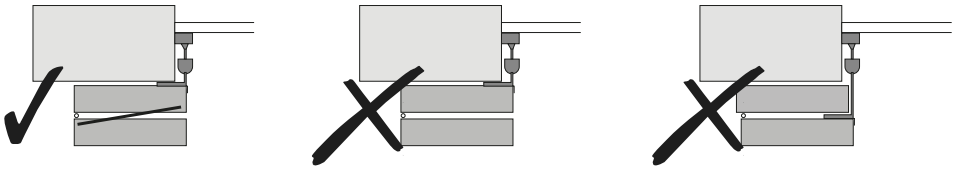

Application area and application notes

DANGER!
Crank openers have a limited storm resistance! Do not use in storm-prone areas!

Shutters with crank openers have limited storm resistance. All notes under Wind Resistance in the catalogue must be observed!

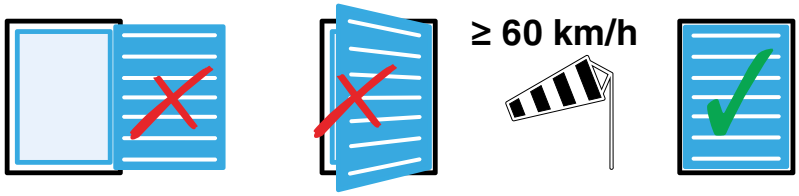

Assembly positions

Swivel arm assembly position

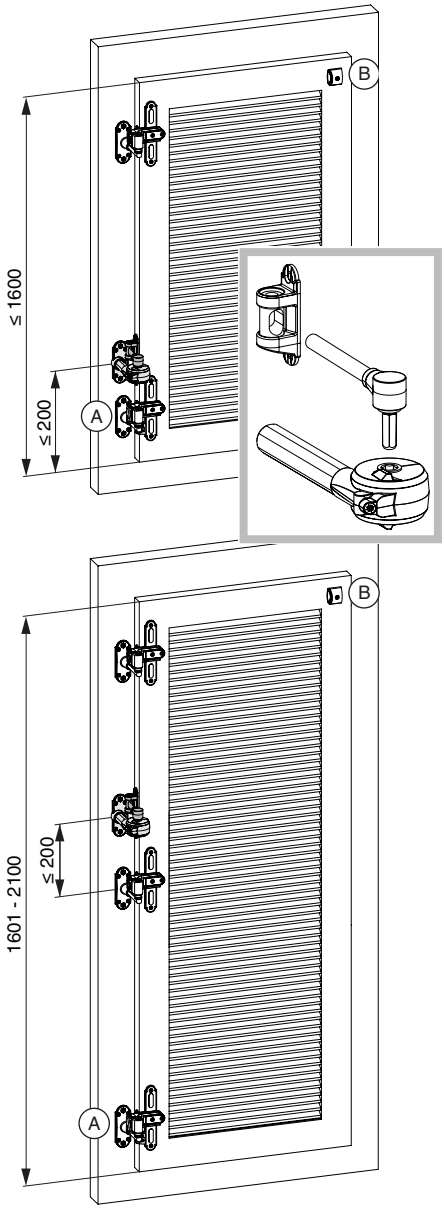

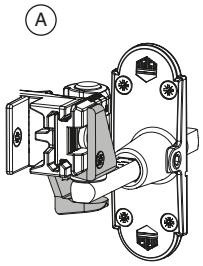

DANGER!
Per shutter, an anti-jemmy device (A) (Art. Nr. 13327 or 13328) and a rebate buffer (B) (Art. Nr. 42929 or 201313) must be installed!

Hinge assembly position

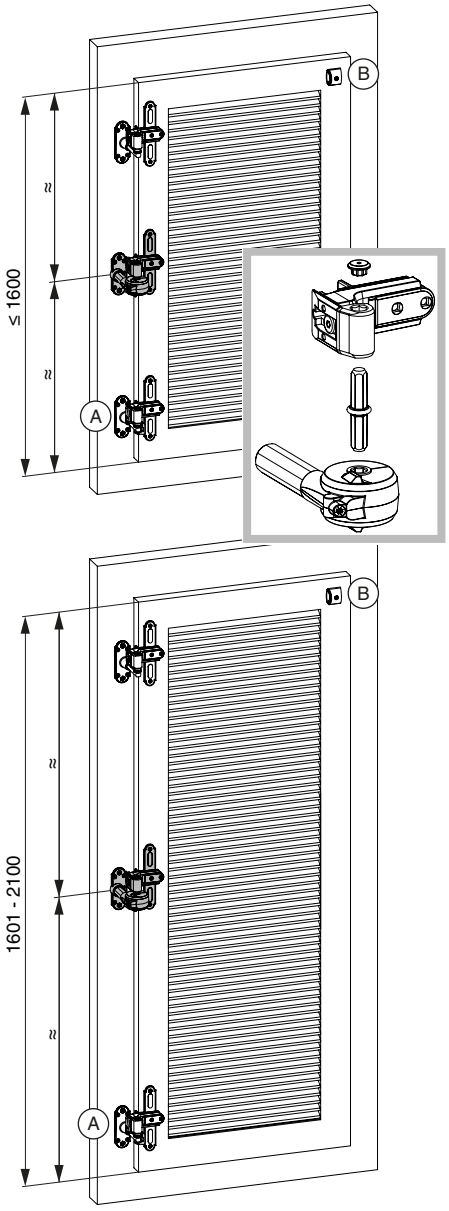

Space requirements and drilling

with swivel arm

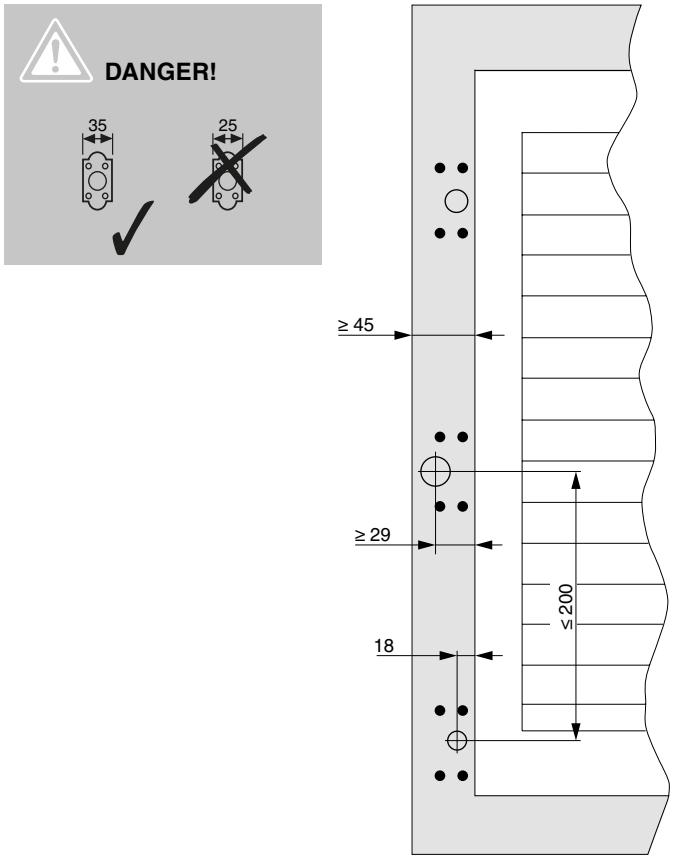

with hinge

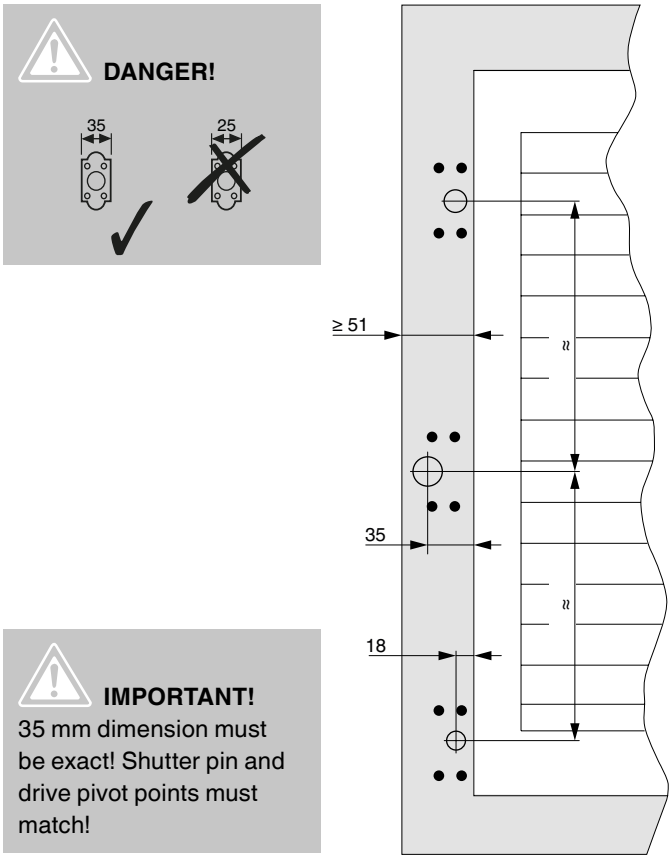

IMPORTANT!
35 mm dimension must be exact! Shutter pin and drive pivot points must match!

PVC frame example

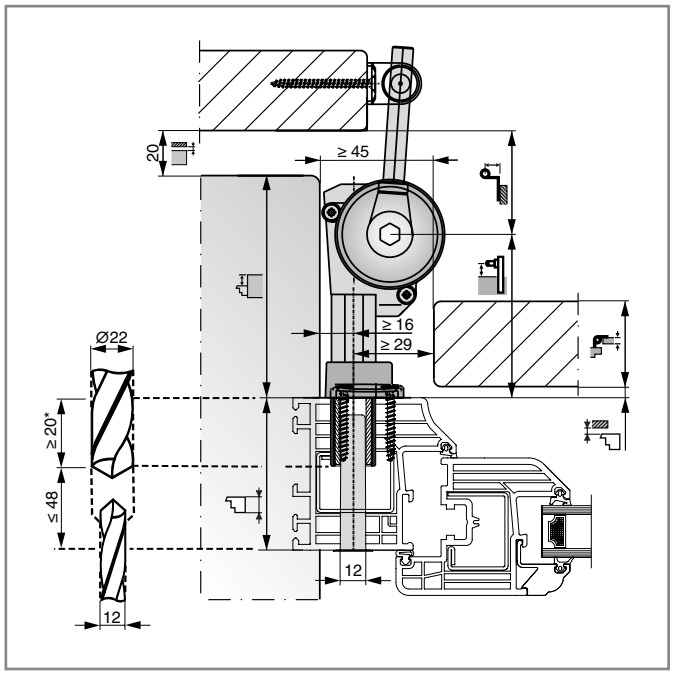

Timber frame example

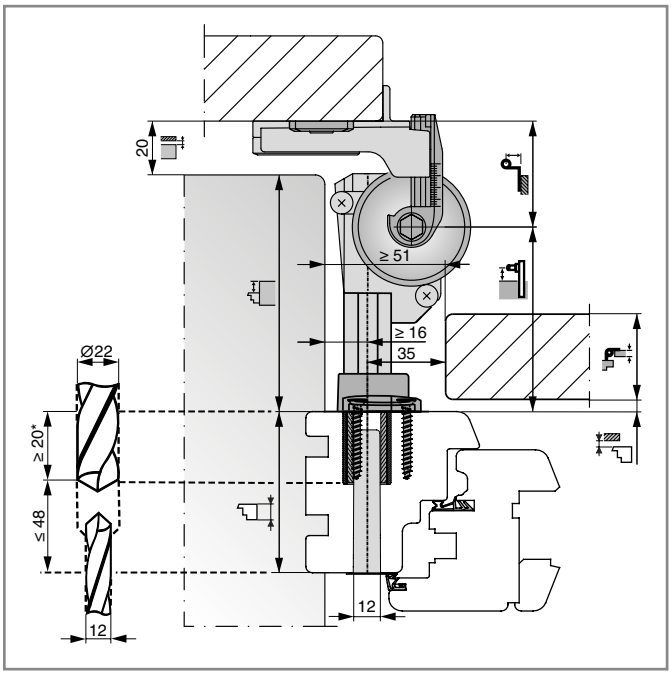

**A bigger depth improves stability*

Calculation examples of the crank opener sizes

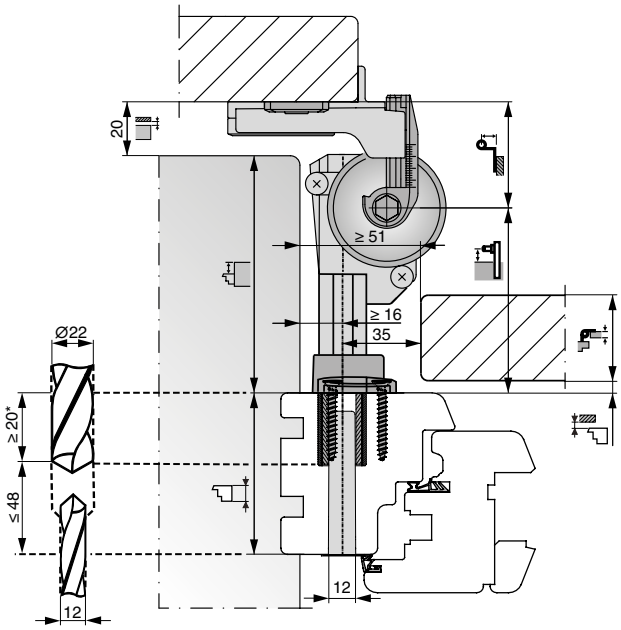

Calculation of hinge crank

	105 mm
+	20 mm
-	30 mm
-	17 mm
=	78 mm : 2 = 39 mm

➜ Size 1 (32 - 50 mm)

Calculation of pin distance

	105 mm
+	20 mm
+	30 mm
+	17 mm
=	172 mm : 2 = 86 mm

➜ L105 (60 - 90 mm)

Cut the drive tube, insulation sleeve and swivel arm as needed!

Calculation of drive length

	86 mm
Depth (min. 20 mm)	+ 40 mm*
=	126 mm

➜ Drive L130

**A bigger depth improves stability*

Shorten the insulation sleeve!
Perform both calculations and use the smaller result!

Calculation 1

	86 mm
	+ 72 mm
=	158 mm
	- 112 mm (fixed size 1)
=	46 mm max. length

46 mm length for the insulation

Calculation 2

	126 mm
	- 74 mm (fixed size 2)
=	52 mm max. length

Calculation of swivel arm

	86 mm
+	4 mm
=	90 mm max. length

CAUTION!
The positioning of the bearing block must be set as high as possible.
This ensures a sufficient distance from the bracket.

Swivel arm assembly

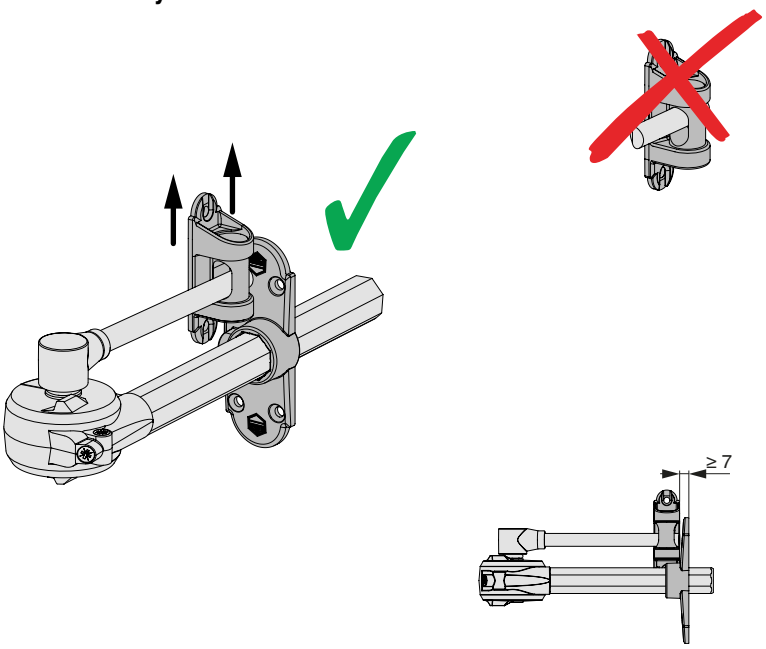

Jig

for joint rebate with swivel arm — No. 205649

The jig allows a variable distance (at least 29 mm) between the drill hole and the shutter edge.

1. Determine clearance on frame installation.
2. Mount the shutters.
3. Set the desired distance between the hole and the shutter edge.

   The distance screws (1) can be used for this purpose.
4. Position the jig for joint rebate (see illustration). Always fix the jig with a clamp.
5. Perform all shutter and frame installation drilling.

   Important:
   Drilling for the crank opener drive:
   Ø 22 mm outside, Ø 12 mm inside.
6. Mount brackets, shutter pins and crank opener drives on the frame.
7. Set the crank opener drives and shutter pins to the required shutter pin distance. Minor deviations are permissible. It must be ensured that when opening the sash, the swivel arm always has sufficient movement in the bearing block.
8. Install the shutter hinges on the shutter and mount the shutter onto the frame.
9. Shorten the swivel arm and insert it. Mount the bearing block on the edge of the shutter.
10. Perform the function test and screw on the buffer stop.

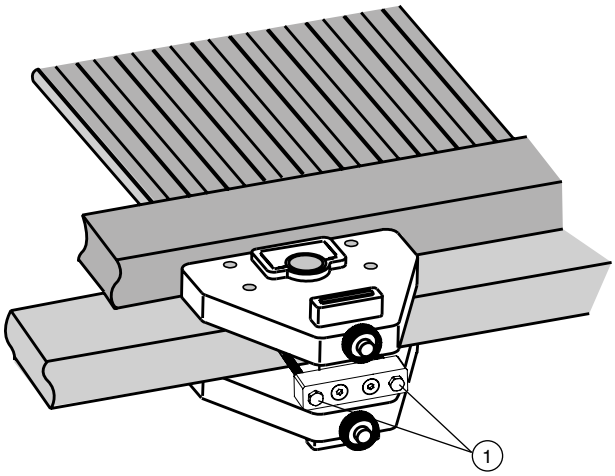

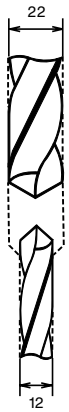

Jig

For joint rebate with hinge – No. 102888

The jig enables an exact drilling with a distance of 35 mm to the shutter edge

ATTENTION:
The fixing bolt and crank opener pivot points must be exactly perpendicular. Inaccuracies can lead to faulty operation and to breakage of hardware.

Therefore, it is important to pay attention to the following:

- Use MACO drilling jigs. The distance between the hole and the shutter edge must be 35 mm.
- All shutter pin distances, including the crank opener, must be set to the same level. The same applies to the adjustment of the hinge crank on the shutter hinges and the crank opener hinge.
- The MOUNTING of the sash must be possible in the open and closed position WITHOUT PRE-TENSIONING.

1. Determine clearance on frame installation.
2. Mount the shutters.
3. Position the jig for joint rebate (see illustration).

   Important: Push the drilling jig for the crank opener from the outside directly on the edge of the shutter and fix it with a clamp.
4. Perform all shutter and frame installation drilling.

   Important: The drilling of the crank opener drive:
   Ø 22 mm outside, Ø 12 mm inside.
5. Mount brackets, shutter pins and crank opener drives on the frame.
6. Set the crank opener drives and shutter pins to the required shutter pin distance. The spacing must be exactly the same.
7. Install the shutter hinges on the shutter and mount the shutter onto the frame.
8. Finally, place the crank opener hinge on the drive bolts and screw into place.
9. Perform the function test and screw on the buffer stop.

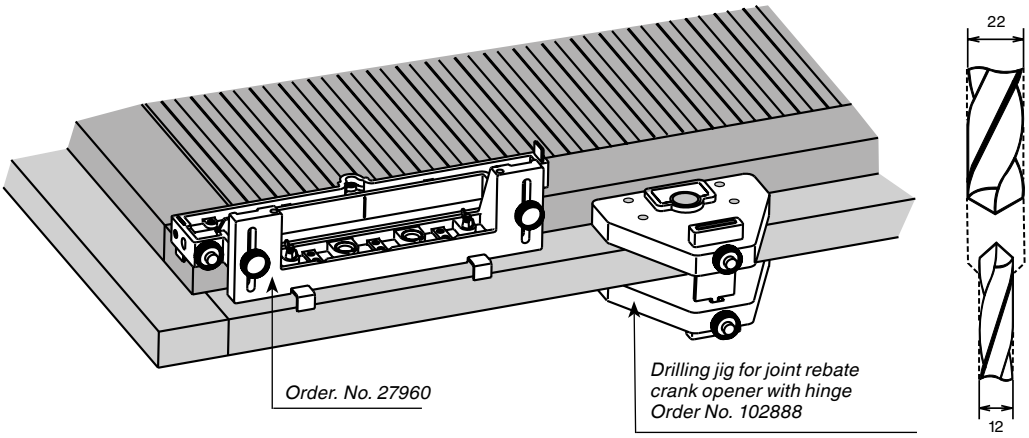

Jig

For separate rebate with swivel arm or hinge - No. 102889

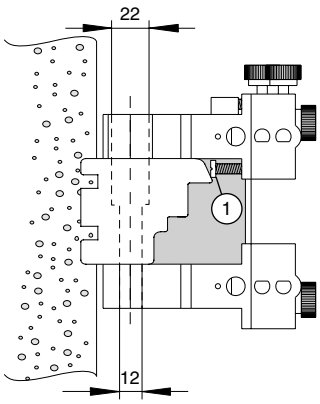

with swivel arm:

1. Mount hinges, shutter pin holders and shutter pins, and then mount the shutters.
2. Mark the position of the shutter edge on the frame.
3. Set the distance of the drive hole (at least 29 mm from the shutter edge).
4. The distance can be adjusted by means of the distance screws (1) justiert werden.
5. Attach the jig to the frame and fix it with screw clamps.
6. Check the distance of at least 29 mm with the marking on the drill body (2).
7. Drill holes on the frame. **Important:** Drilling for the crank opener drive: Ø 22 mm outside, Ø 12 mm inside.
8. Mount the crank opener drive and set the shutter pin distance exactly.
9. Shorten the swivel arm and insert it. Mount the bearing block on the edge of the shutter.

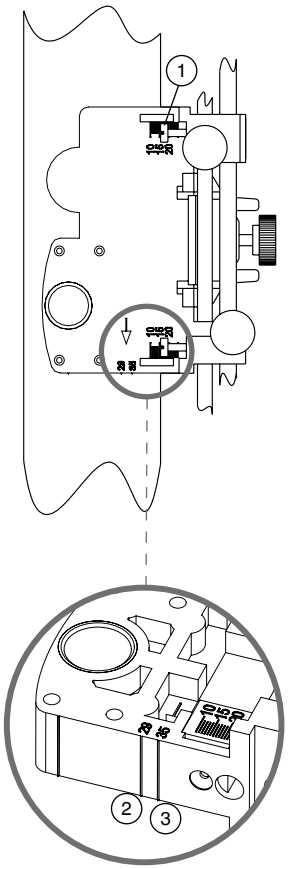

with hinge:

1. Mount hinges, shutter pin holders and shutter pins, and then mount the shutters.
2. Mark the position of the shutter edge on the frame.
3. Set the shutter clearance using the distance screws (1) on the drill body (to scale).
4. Attach the jig to the frame and fix it with screw clamps.
5. Check the distance with the mark „35“. It must lie exactly on the position of the shutter edge (3).
6. Correct deviations if necessary – these can occur for example with oblique profiling of the frame installation.
7. Drill holes on the frame. **Important:** Drilling for the crank opener drive: Ø 22 mm outside, Ø 12 mm inside.
8. Mount the crank opener drive and set the shutter pin distance exactly.
9. Mount the crank opener hinge on the drive bolts and screw into place.
10. Perform the function test and screw on the buffer stop.

ATTENTION:
The fixing bolt and crank opener pivot points must be exactly perpendicular. Inaccuracies can lead to faulty operation and to breakage of hardware.

Therefore, it is important to pay attention to the following:

- Use MACO drilling jigs. The distance between the hole and the shutter edge must be 35 mm.
- All shutter pin distances, including the crank opener, must be set to the same level. The same applies to the adjustment of the hinge crank on the shutter hinges and the crank opener hinge.
- The mounting of the sash must be possible in the open and closed position without pre-loading.

Folding shutter rods

Over-dimensions for guide rod[1] (1)

Size 0	0 – 3 mm
Size 1	2 – 10 mm
Size 2	7 – 20 mm
Size 3	17 – 40 mm

Assembly position for pivot bearing[1] (2)

Size 0	79 – 83 mm
Size 1	82 – 90 mm
Size 2	87 – 100 mm
Size 3	97 – 120 mm

Gap for locking hooks[1] (3)

Size 0	9 – 10 mm
Size 1	10 – 12 mm
Size 2	11 – 15 mm
Size 3	14 – 20 mm

Gap dimensions[1] (4)

Size 0	10 – 12 mm
Size 1	11 – 14 mm
Size 2	13 – 18 mm
Size 3	17 – 24 mm

[1]Attention:

Data for hinges size 0 - 3. The specified dimensions are guideline values for shutter widths of 400 mm and shutter thickness of 40 mm. They may deviate from the specified values for different shutter widths and shutter strengths!

1. Loosen the locking screw and shorten the guide rod (Fig. 1).
2. Mount the pivot bearing on the frame (Fig. 2, see table for assembly position!).

   Screw head down. Important for later dismounting.
3. Screw down the upper and lower striker pin brackets on the shutter end. Mount the locking hook in the indicated positioning on the frame (Fig. 3).
4. Pull out the guide rod (important for pre-loading) and connect by fixing the clamping screw (fig. 1).
5. Note the pivot point of the middle hinge! Only for shutter constructions with internal pivot point (fig. 4)!

Figure 1

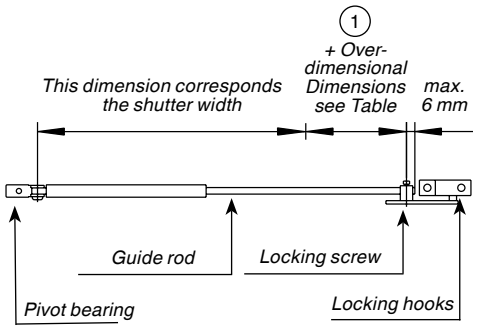

Figure 2 - Assembly situation

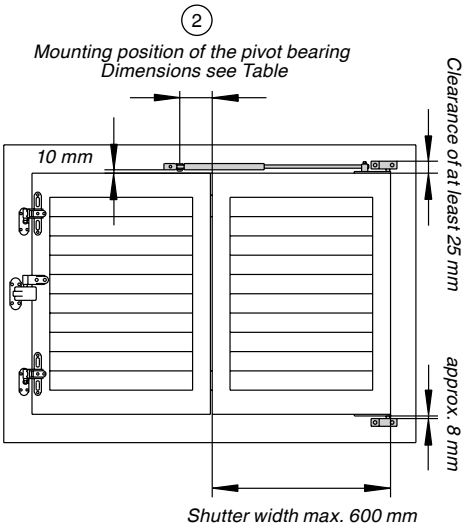

Figure 3

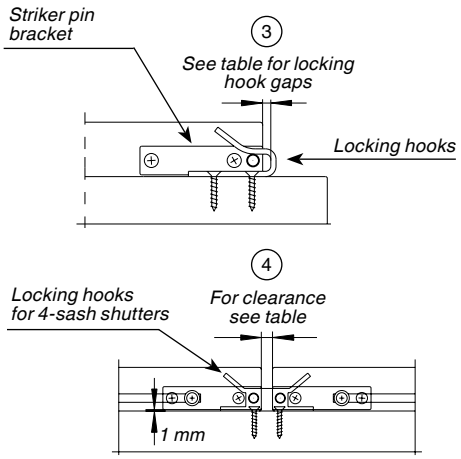

Figure 4

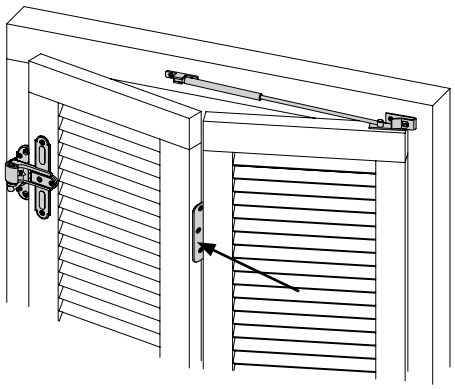

Shutter locks

Centre lock single-sash (usable on left and on right)

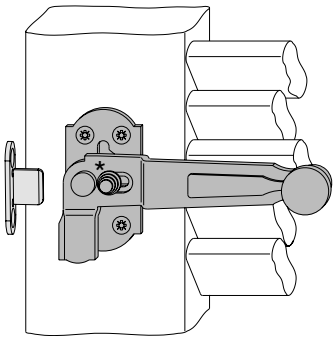

**Operating lock*

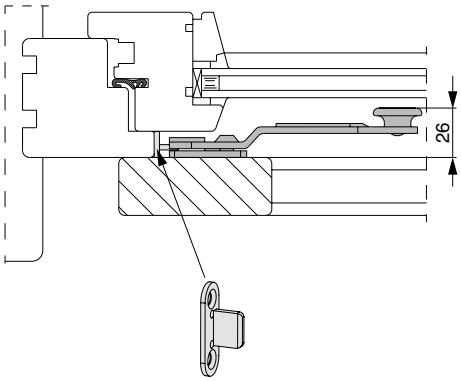

Striker pin bracket
for single sash shutters with
10 or 17 mm spacing.

Centre lock double-sash (usable on left and on right)

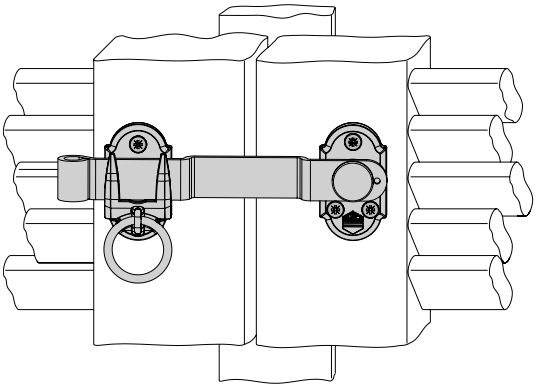

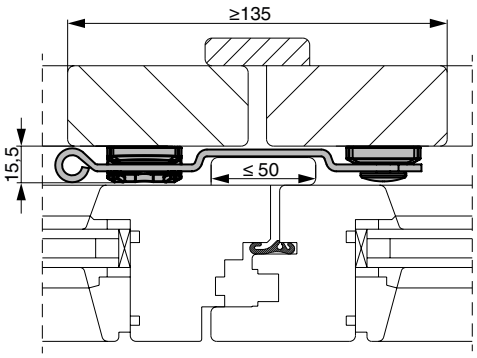

Multi-point locking rod

Shutter lock 1-sash (usable on left and right)

Double-sash example

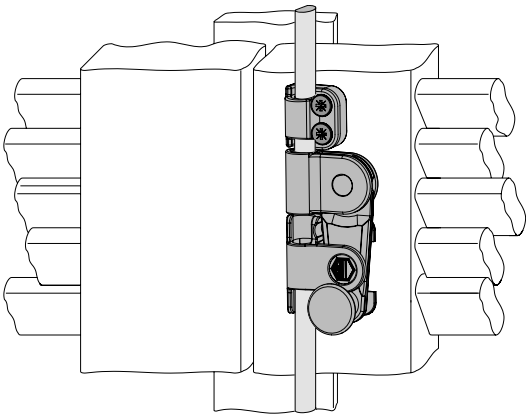

Single-sash cross-section

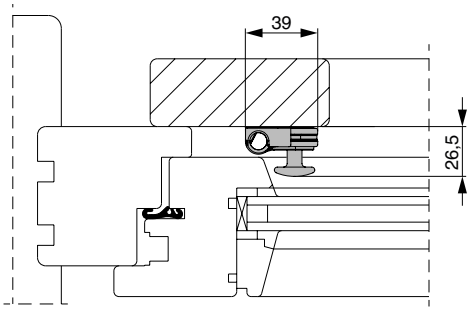

Double-sash cross-section

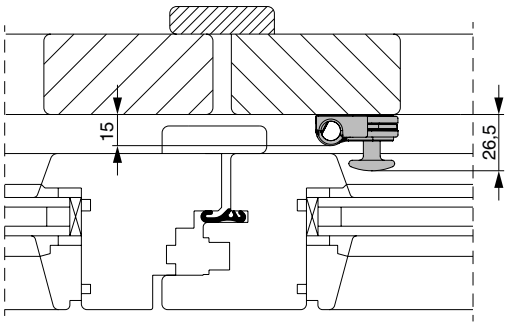

Shutter lock 2-sash (usable on left and right)

Double-sash example
Vertical locking function

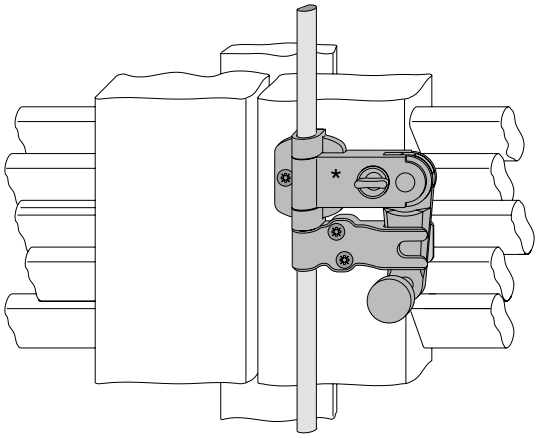

**Operating lock*

Single-sash cross-section

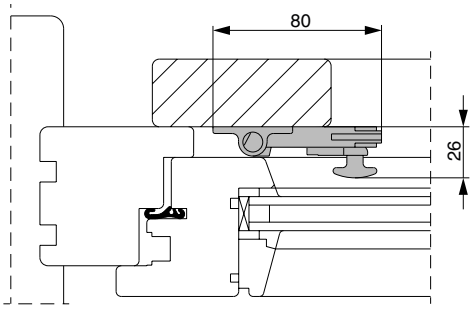

Double-sash cross-section

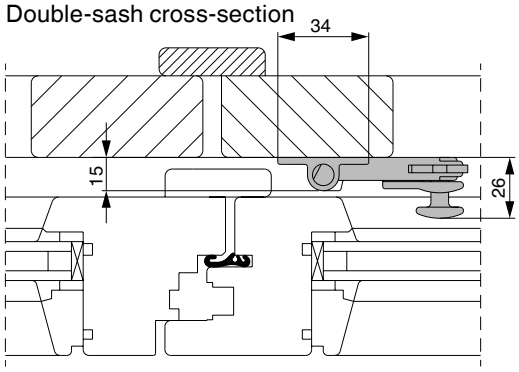

Multi-point locking rod

Shutter lock 2-sash (usable on left and right)

Double-sash example
Horizontal locking function

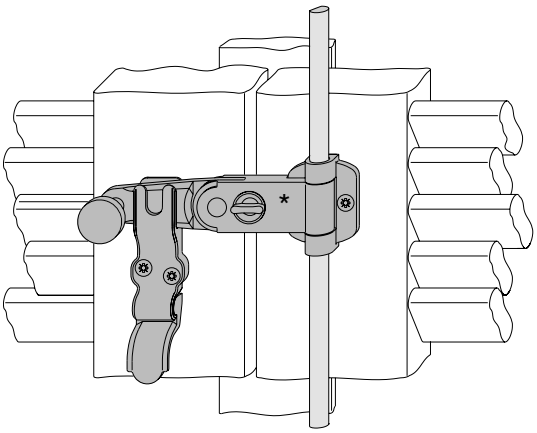

**Operating lock*

Double-sash cross-section

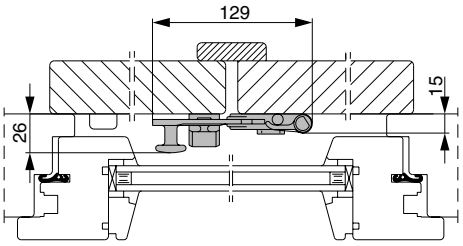

Snap lock (usable on left and right)

Double-sash example

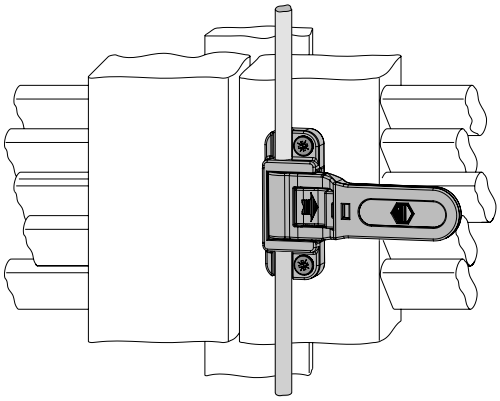

Single-sash cross-section

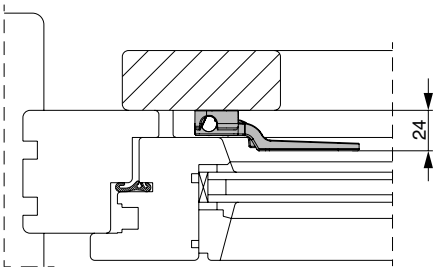

Double-sash cross-section

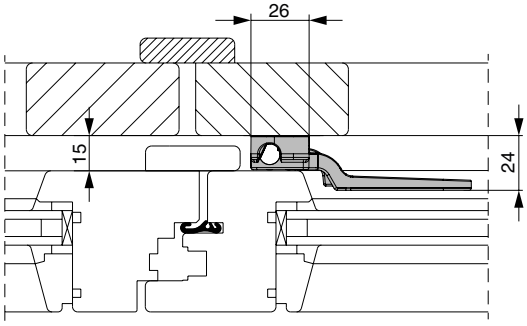

Multi-point locking rod

Striker pin brackets

for mounting with a gap

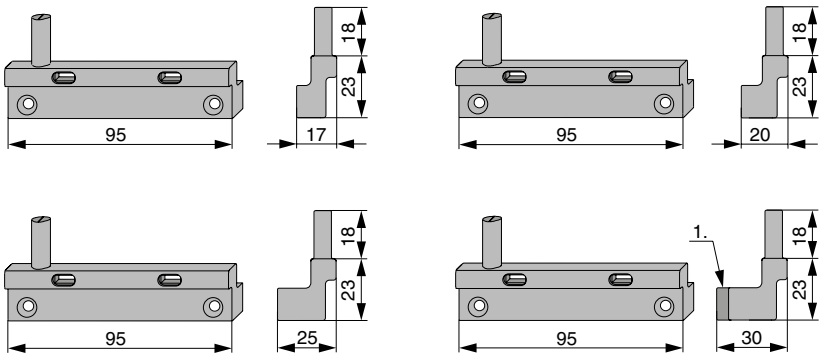

1. Packer 5 mm

Assembly examples

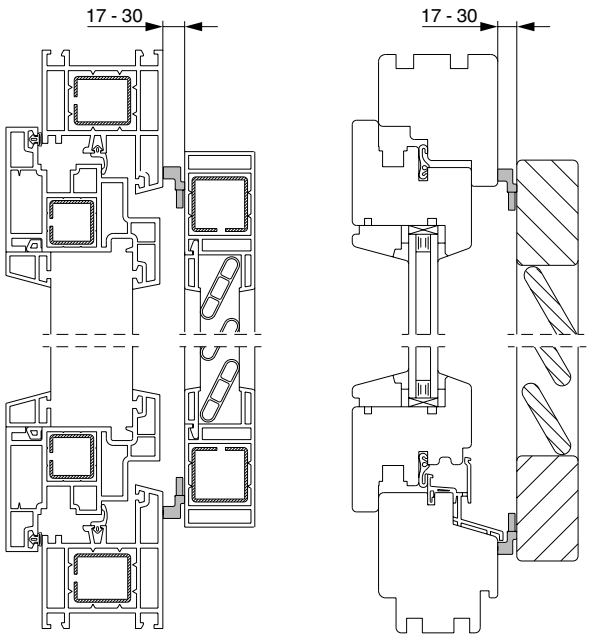

Folding shutters

with external pivot point

Example with reveal

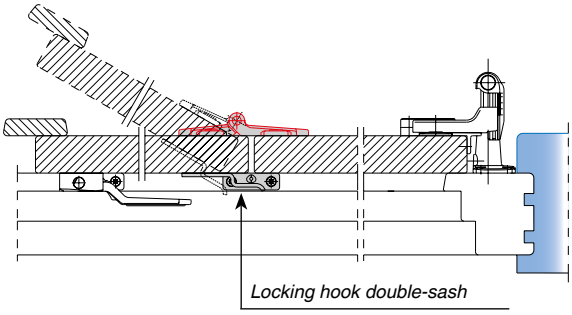

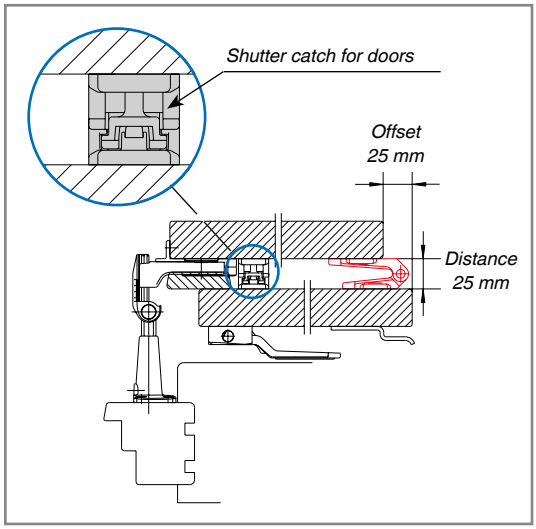

When assembling with a distance between the frame and the shutter, use a „striker pin bracket for spacing“ of 10, 17, 20 or 25 mm.

Example without reveal

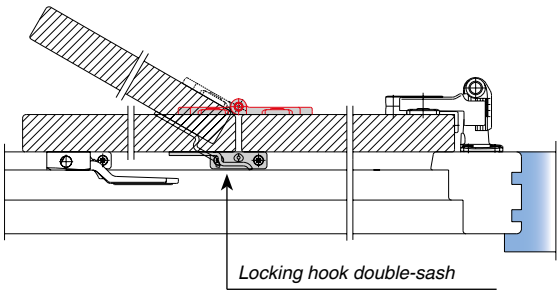

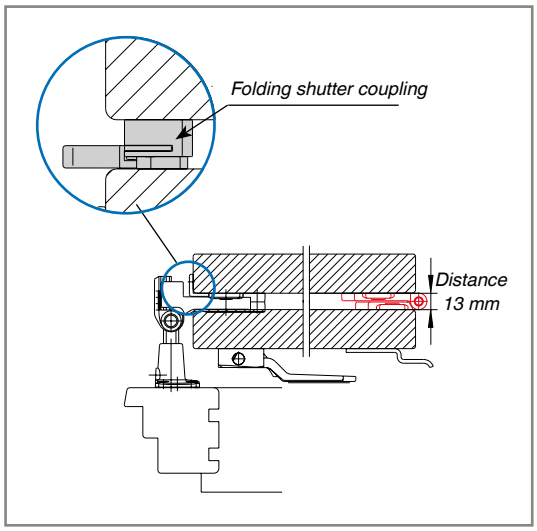

Folding shutters

with internal pivot point

Example with reveal

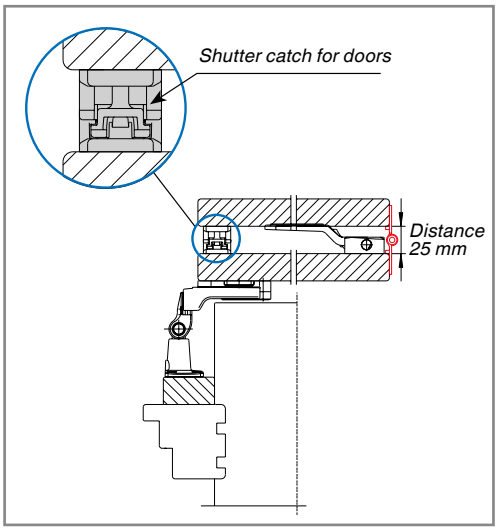

Example without reveal

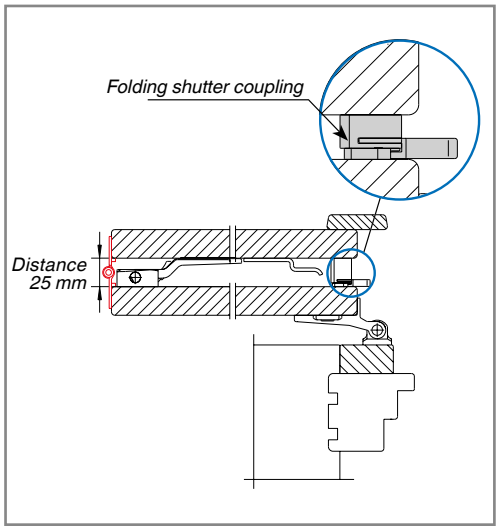

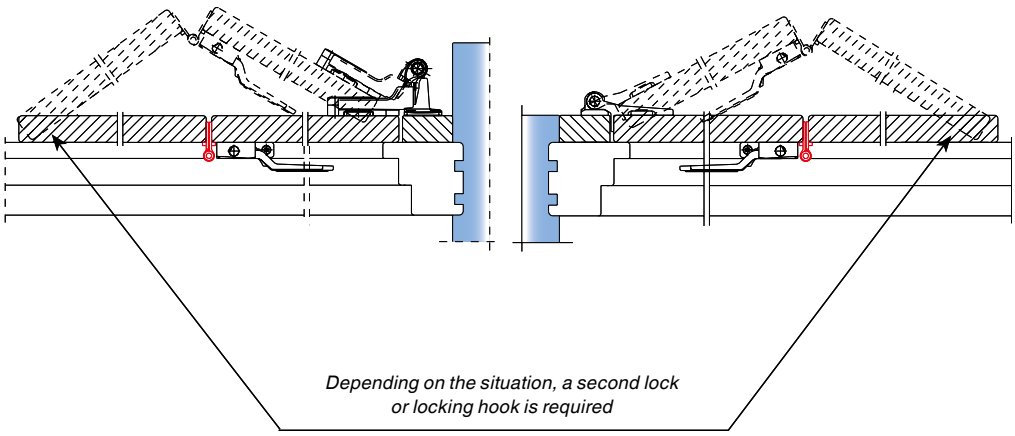

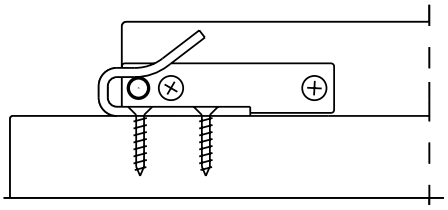

Shutter suspending run-up block

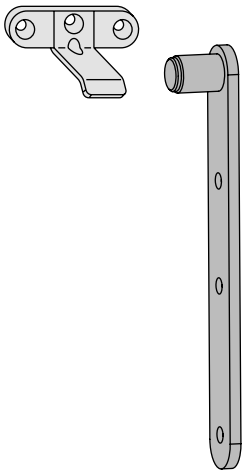

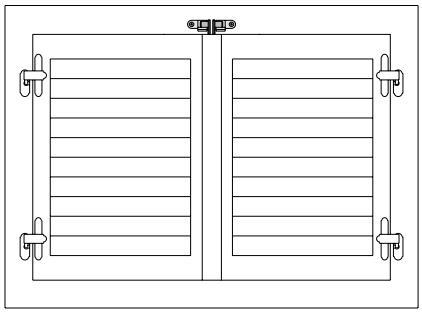

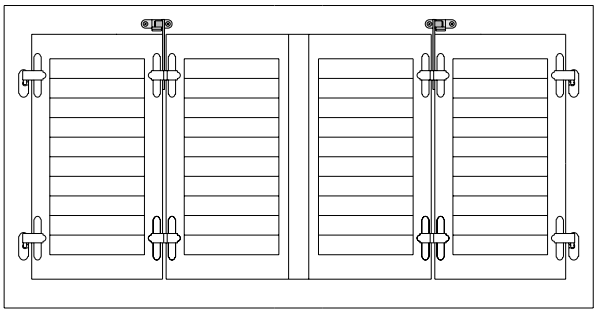

For shutters

For folding shutters

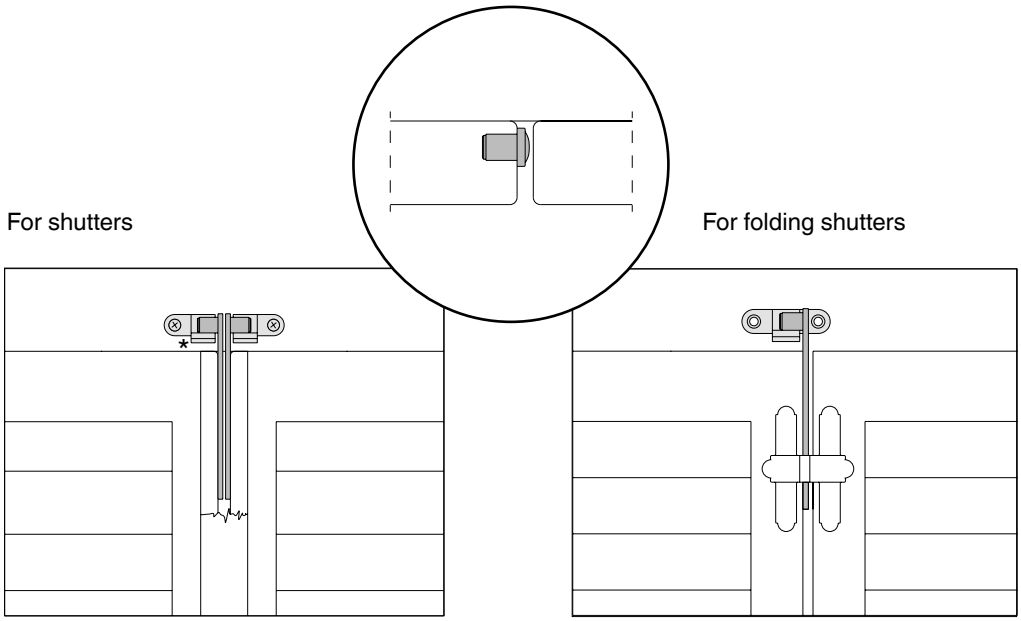

**Run-up block plate*

MACO
RUSTICO

MAYER & CO
BESCHLÄGE GMBH
Alpenstraße 173
A-5020 Salzburg

Tel.: +43 662 6196-0
E-Mail: maco@maco.eu
www.maco.eu

Satisfied?
We appreciate your
feedback@maco.eu

Order No. 757619 - Date: July 2000 - date changed: November 2019

Illustrations: MACO

This print document is revised regularly.
The latest version is available at
https://www.maco.eu/assets/757619
or by scanning the QR code.